หัวจับ
TRACTION DRIVE SPEED ACCELERATOR

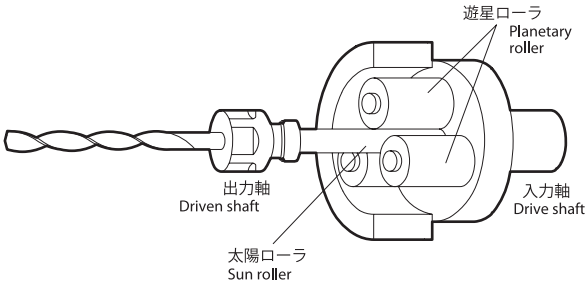

POSITIONING BLOCK

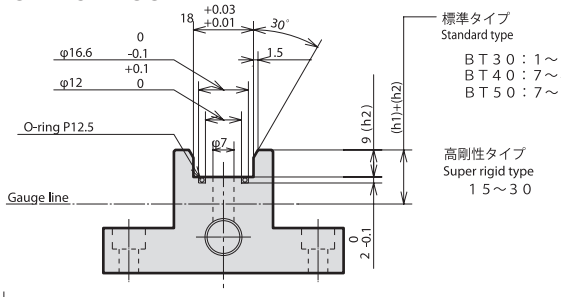

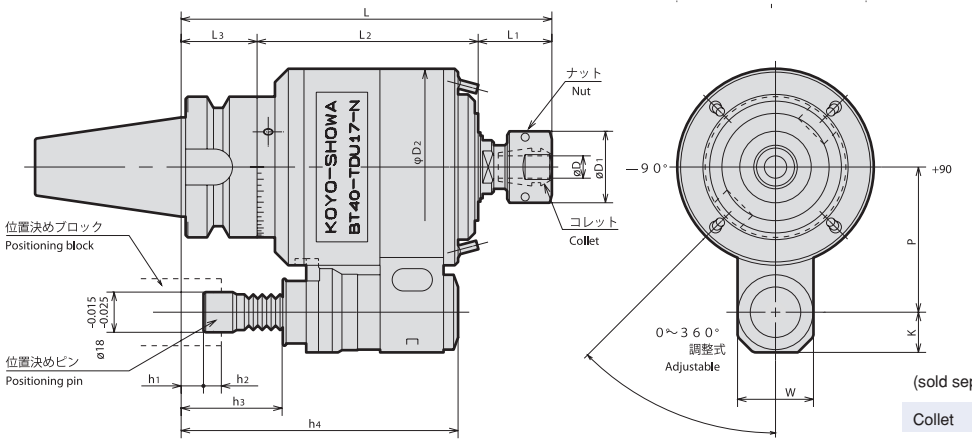

(sold separately)

Collet ➡ Page 942

Traction drive (TD) speeder is an A.T.C. type speed accelerator,which employs planetary rollers and is co-developed and introduced to the market by Koyo Seiko and SHOWA for the first time in the world.

FEATURES

- 30,000 min^{-1} is obtainable on normal M/C.
- High and stable torgue transmission enables small diameter drilling and endmilling, as well as deep grooving.
- Capable even for grinding on M/C, with minimum vibration and noise.
- Compact and light weight A.T.C. type.
- Broadly adjustment Positioning Pin “One-touch” adjustment, and a height range of 40 mm.

Standard Type

Order No.			Speed Ratio	Max (min^{-1})	L	L1	L2	L3	ØD	ØD1	ØD2	h1	h2	h3	h4	P	K	W	N/W (kg)	Max. power (kg)	Static Rigidity (N/μm)	Collet (AA Grade)	Nut Code
BT30	**-TDU17-N**	**10180**	1:6	30,000	159	31	100	28	0.5 ~10	30	88	-6 ~29	7 ~9	39.5 ~ 42.5	118	65	18	34	4.3	3.1	8.8	CR10-(D)	RSN10NB
BT40	**-TDU17-N**	**11496**	1:6	30,000	165	31	100	34	0.5 ~10	30	88	40 ~35	7 ~9	45.5 ~ 48.5	124	65	18	34	5.4	3.1	9.8	CR10-(D)	RSN10NB
BT50	**-TDU17-N**	**13896**	1:6	30,000	169	31	100	38	0.5 ~10	30	88	0 ~39	7 ~9	49.5 ~ 52.5	128	80	18	34	7.9	3.1	12.7	CR10-(D)	RSN10NB

Super Rigid Type

Order No.			Speed Ratio	Max (min^{-1})	L	L1	L2	L3	ØD	ØD1	ØD2	h1	h2	h3	h4	P	K	W	N/W (kg)	Max. power (kg)	Static Rigidity (N/μm)	Collet (AA Grade)	Nut Code
BT50	**-TDU40**	**13894**	1:3.4	12,000	200	42	120	38	1.5 ~20	50	120	6 ~21	9	15 ~30	112	80	22	37	11.5	8.8	30.4	CR20-(D)	RSN20NB

Designed by JSR GROUP
Copyright © 2018 JSR GROUP, All rights reserved.
ห้ามนำไปเผยแพร่ก่อนได้รับอนุญาติจากทางบริษัท