หัวจับ
FACE MILL ARBOR (Type C)

Thru-the-tool Coolant Available (Option)

FIG.1

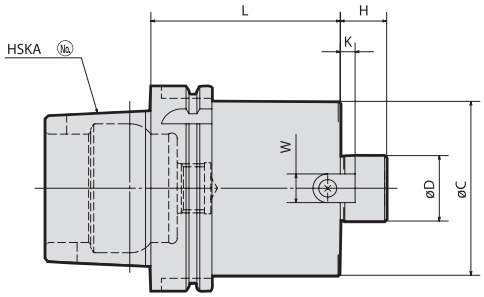

FIG.2

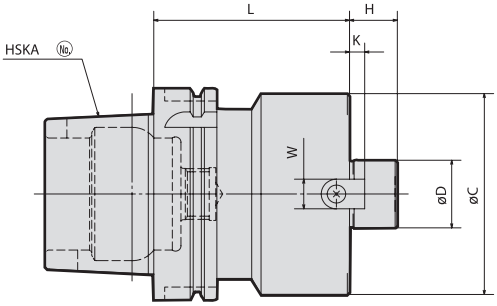

Order No.				FIG.	ØD (h6)	L	ØC	H	KEY K	KEY W	CLAMP BOLT	N/W (kg)
HSKA63	-FMC25.4	-060	320680	2	25.4	60	70	20	5	9.5	M12x35L	1.5
	-FMC38.1	-060	320682		38.1	60	85	22	7	15.9	M16x40L	0.8
	-FMC22	-060	320684	1	22	60	45	18	5	10	M10x30L	1.1
	-FMC27	-060	320686	2	27	60	70	20	6	12	M12x35L	1.5
	-FMC32	-060			32	60	85	22	7	14	M16x40L	1.8
HSKA100	-FMC25.4	-045		1	25.4	45	70	20	5	9.5	M12x35L	2.9
	-FMC38.1	-045			38.1	45	85	22	7	15.9	M16x40L	3.5
	-FMC22	-060	350704		22	60	45	18	5	10	M10x30L	2.4
	-FMC27	-060			27	45	70	20	6	12	M12x35L	3.0
	-FMC32	-060			32	45	85	22	7	14	M16x40L	3.4

NOTE :
1. Coolant pipe is included.
2. For Sandvik and Seco cutters.

ORDERING EXAMPLE

①		②	③		④
HSKA63	-	FMC	25.4	-	060

① Shank Size
② Name
③ ØD
④ G.L. Length

Designed by JSR GROUP
Copyright © 2018 JSR GROUP, All rights reserved.
ห้ามนำไปเผยแพร่ก่อนได้รับอนุญาติจากทางบริษัท